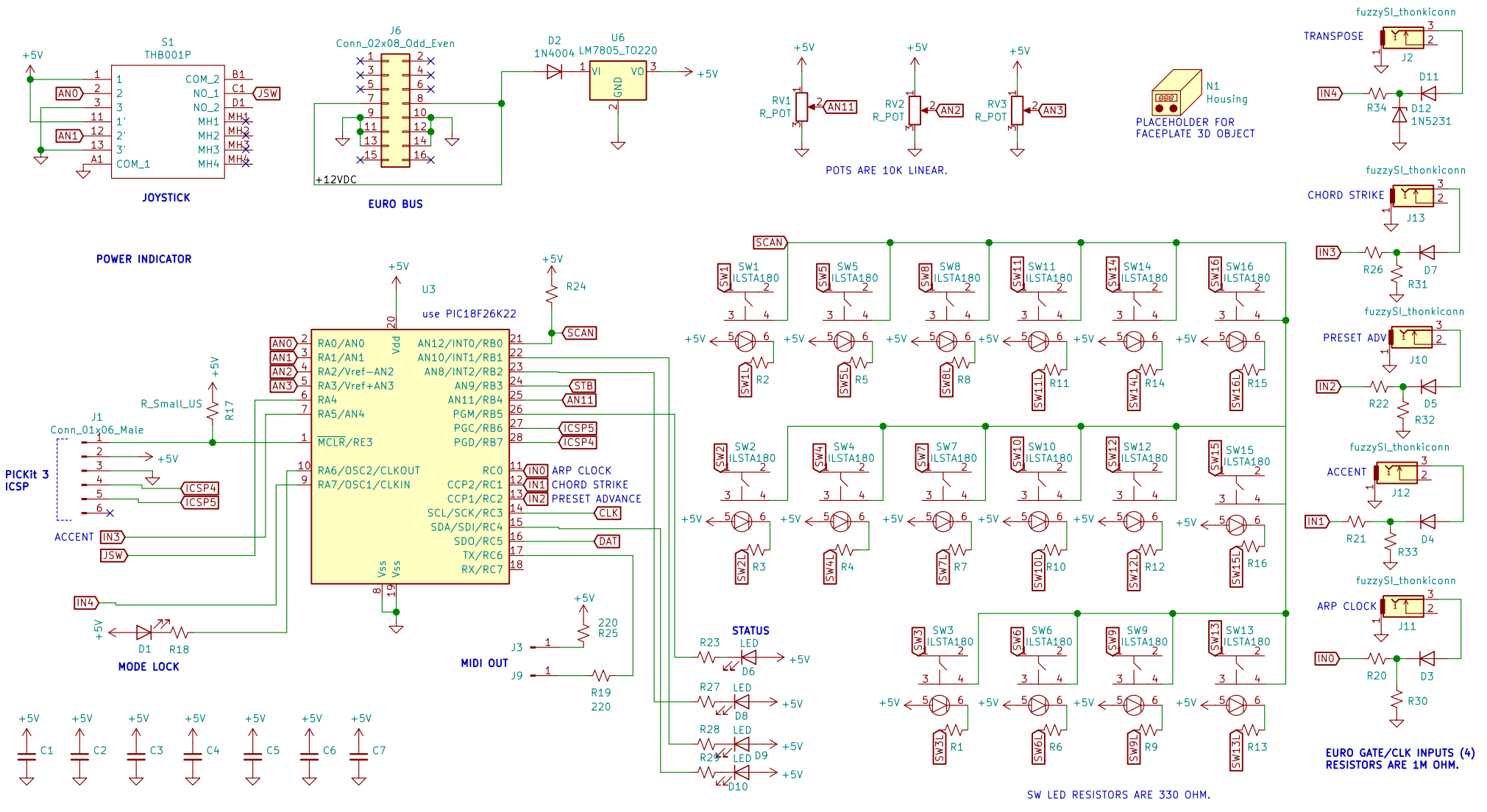
S1
THB001P
JOYSTICK
J6
Conn_02x08_Odd_Even
EURO BUS
+12VDC
D2
1N4004
U6
LM7805_TO220
RV1
R_POT
RV2
R_POT
RV3
R_POT
POTS ARE 10K LINEAR.
N1
Housing
PLACEHOLDER FOR
FACEPLATE 3D OBJECT
POWER INDICATOR
U3
use PIC18F26K22
R24
SCAN
J1
Conn_01x06_Male
PICKit 3
ICSP
R_Small_US
R17
ACCENT
D1
R18
MODE LOCK
MIDI OUT
J3
J9
R25
220
R19
220
STATUS
R23
R27
R28
R29
D6
D8
D9
D10
C1
C2
C3
C4
C5
C6
C7
SW1
ILSTA180
SW2
SW3
SW4
SW5
SW6
SW7
SW8
SW9
SW10
SW11
SW12
SW13
SW14
SW15
SW16
SW1L
SW2L
SW3L
SW4L
SW5L
SW6L
SW7L
SW8L
SW9L
SW10L
SW11L
SW12L
SW13L
SW14L
SW15L
SW16L
R1
R2
R3
R4
R5
R6
R7
R8
R9
R10
R11
R12
R13
R14
R15
R16
SW LED RESISTORS ARE 330 OHM.
fuzzySI_thonkiconn
TRANSPOSE
J2
D11
R34
D12
1N5231
CHORD STRIKE
J13
R26
D7
R31
PRESET ADV
J10
R22
D5
R32
ACCENT
J12
R21
D4
R33
ARP CLOCK
J11
R20
D3
R30
EURO GATE/CLK INPUTS (4)
RESISTORS ARE 1M OHM.
U1
UCN5821
U2
UCN5821
U4
UCN5821
U5
UCN5821
rantbot
Sheet: /
File: control-surface-rev2.sch
Title: CONTROL SURFACE REV 2 SCHEMATIC – EURORACK MIDI SEQUENCER MODULE
Size: A4
Date: 23 DEC 2021
Rev: rev 2
KiCad E.D.A. kicad (5.1.4)-1
Id: 1/1